SERIES H17 – H18 · WAFER CARRIERS

Wafer cassettes and shippers

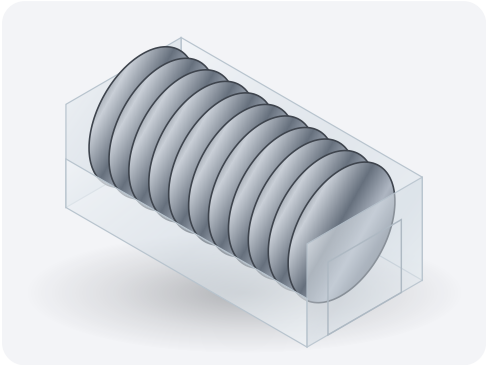

Store and transport wafers safely between processes and between laboratories. Polypropylene carriers for general use, PFA for wet-chemical processing.

- 25-slot cassettes for 2" to 8" wafers
- Single-wafer shippers with retention spring
- Coin-stack (horizontal) shippers with interleaves
- Cleanroom-grade materials, low outgassing

CASSETTES

Ref. No.	Wafer size	Slots	Material	Use	Price
H1701	2"	25	Polypropylene	Storage and transfer	On request
H1702	3"	25	Polypropylene	Storage and transfer	On request
H1703	8"	25	Polypropylene	Storage and transfer	On request
H1704	4"	25	Polypropylene	Storage (PP), wet processing (PFA)	On request
H1705	4"	25	PFA	Storage (PP), wet processing (PFA)	On request
H1706	6"	25	Polypropylene	Storage (PP), wet processing (PFA)	On request
H1707	6"	25	PFA	Storage (PP), wet processing (PFA)	On request
H1708	2"	–	Polypropylene	Lidded box for one cassette	On request
H1709	3"	–	Polypropylene	Lidded box for one cassette	On request
H1710	4"	–	Polypropylene	Lidded box for one cassette	On request
H1711	6"	–	Polypropylene	Lidded box for one cassette	On request
H1712	8"	–	Polypropylene	Lidded box for one cassette	On request

SHIPPERS

Ref. No.	Type	Wafer size	Capacity	Price
H1801	Single-wafer shipper	2"	1 wafer	On request
H1802	Single-wafer shipper	3"	1 wafer	On request
H1803	Single-wafer shipper	4"	1 wafer	On request
H1804	Single-wafer shipper	6"	1 wafer	On request
H1805	Single-wafer shipper	8"	1 wafer	On request
H1806	Coin-stack shipper with interleaves	2"	Up to 25 wafers	On request
H1807	Coin-stack shipper with interleaves	3"	Up to 25 wafers	On request
H1808	Coin-stack shipper with interleaves	4"	Up to 25 wafers	On request
H1809	Coin-stack shipper with interleaves	6"	Up to 25 wafers	On request
H1810	Interleave papers (100 pcs)	2"	–	On request
H1811	Interleave papers (100 pcs)	3"	–	On request
H1812	Interleave papers (100 pcs)	4"	–	On request

Ref. No.	Type	Wafer size	Capacity	Price
H1813	Interleave papers (100 pcs)	6"	—	On request

Specifications are typical values; every lot ships with a Certificate of Conformance, and measured data are available on request. Prices on request.